Civils & Highways / Active Travel Kerbs / Highway / Highway 400

Highway 400x350

400x350 | Radius | L-960 | External | 8m | Bullnose | VB

SPECIFICATION

Highway 400x350 | 400x350 | Radius | L-960 | External | 8m | Bullnose | VB

SKU: ATK-HWQ-003-6457

Material	Concrete, Kellen
Finish	Standard Wet Cast, Lavaro
Size	400(w) x 350(d) x 960(l)
Weight Per Unit	310kg
Manufacturing Standard	BS EN 1340:2003
Density	2350 kg/m³
GWP (total) kgCO2e	33.03 kgCO2e/unit
Dutch Ref.	TROTTOIRBOCHTBANDEN-40x35xL96-8m-VB
Type	Radius External
End Style	VB
Profile	400x350
Position	-
Face	Bullnose
Face Angle	-
Return Angle	-
Radius	8m
Number per 360	52
Slope Angle	-
Slope Gradient	-

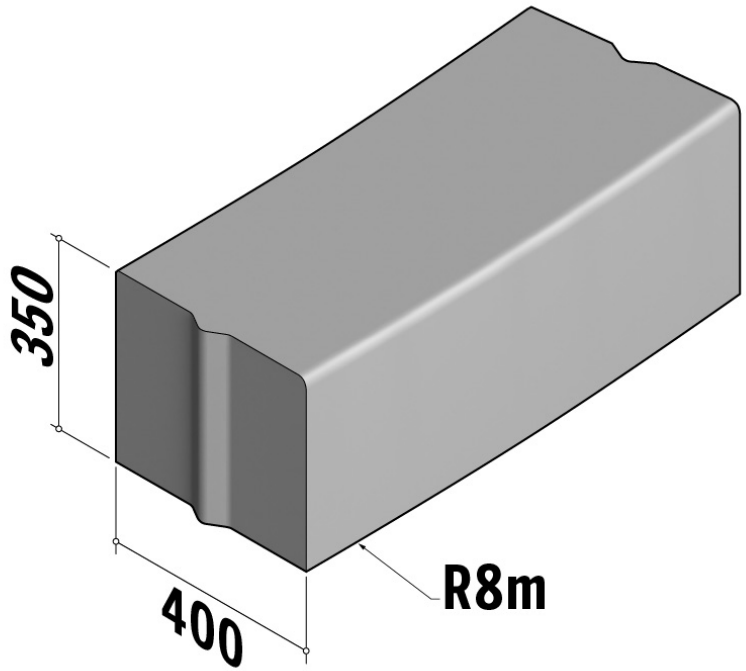

Active Travel Kerbs are available in a range of colours, finishes and materials.

View product online at : https://hardscape.co.uk/product/Highway-400x350-400x350-Radius-L-960-External-8m-Bullnose-VB/

Specification & technical data is indicative and subject to change. Images are for illustrative purposes only, details may vary. Some data may vary according to colour / material / finish variation.