Civils & Highways / Active Travel Kerbs / Highway / Highway 110-220

Highway 110-220x250

110-220x250 | Radius | L-785 | External | 10m | Splay | VB

SPECIFICATION

Highway 110-220x250 | 110-220x250 | Radius | L-785 | External | 10m | Splay | VB

SKU: ATK-HWG-004-6247

Material	Concrete, Kellen
Finish	Standard, Optiflex, Lavaro
Size	110-220(w) x 250(d) x 785(l)
Weight Per Unit	90.4kg
Manufacturing Standard	BS EN 1340:2003
Density	2350 kg/m³
GWP (total) kgCO2e	9.63 kgCO2e/unit
Dutch Ref.	TROTTOIRBOCHTBANDEN-11-22x25xL78.5-10m-VB
Type	Radius External
End Style	VB
Profile	110-220x250
Position	-
Face	Splay
Face Angle	48°
Return Angle	-
Radius	10m
Number per 360	80
Slope Angle	-
Slope Gradient	-

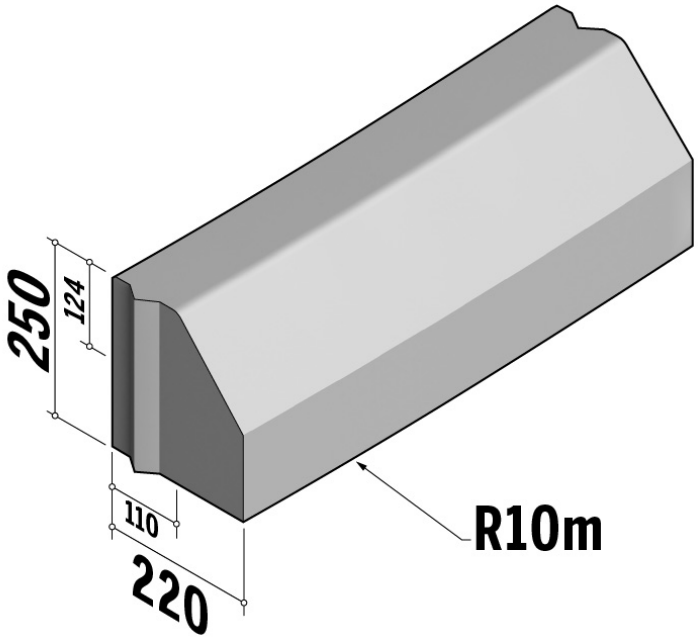

Active Travel Kerbs are available in a range of colours, finishes and materials.

Specification & technical data is indicative and subject to change. Images are for illustrative purposes only, details may vary. Some data may vary according to colour / material / finish variation.