Civils & Highways / Active Travel Kerbs / Highway / Highway 130-150

# Highway 130-150x200 HD

## 130-150x200 HD | Radius | L-785 | External | 6m | Half-Battered | HD

### SPECIFICATION

**Highway 130-150x200 HD | 130-150x200 HD | Radius | L-785 | External | 6m | Half-Battered | HD**

**SKU:** ATK-HWA-003-5254

| | |
|---|---|
| **Material** | Concrete, Kellen |
| **Finish** | Standard, Lavaro |
| **Size** | 130-150(w) x 200(d) x 785(l) |
| **Weight Per Unit** | 51.65kg |
| **Manufacturing Standard** | BS EN 1340:2003 |
| **Density** | 2350 kg/m³ |
| **GWP (total) kgCO2e** | 5.5 kgCO2e/unit |
| **Dutch Ref.** | TROTTOIRBOCHTBANDEN-13-15x20xL78.5-6m-HD |
| **Type** | Radius External |
| **End Style** | HD |
| **Profile** | 130-150x200 |
| **Position** | - |
| **Face** | Half-Battered |
| **Face Angle** | 81° |
| **Return Angle** | - |
| **Radius** | 6m |
| **Number per 360** | 48 |
| **Slope Angle** | - |
| **Slope Gradient** | - |

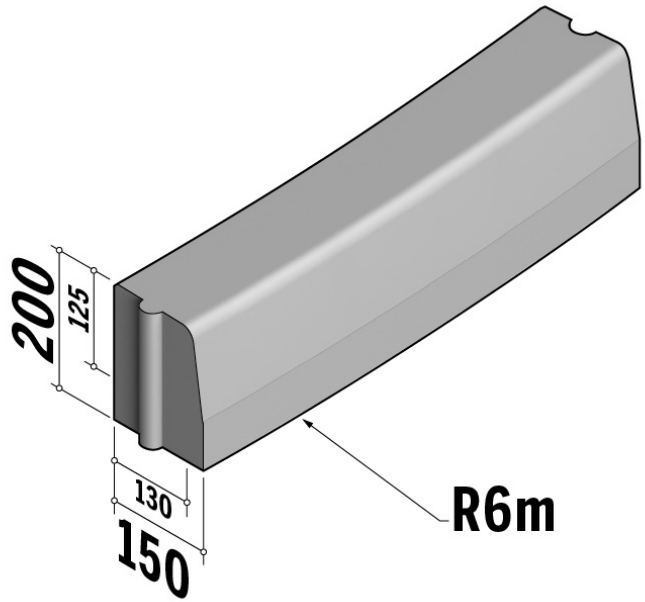


Active Travel Kerbs are available in a range of colours, finishes and materials.

View product online at : https://hardscape.co.uk/product/Highway-130-150x200-HD-130-150x200-HD-Radius-L-785-External-6m-Half-Battered-HD/

*Specification & technical data is indicative and subject to change. Images are for illustrative purposes only, details may vary. Some data may vary according to colour / material / finish variation.*