Civils & Highways / Active Travel Kerbs / Highway / Highway 130-150

Highway 130-150x120 HD

130-150x120 HD | Radius | L-785 | External | 3m | Half-Battered | HD

SPECIFICATION

Highway 130-150x120 HD | 130-150x120 HD | Radius | L-785 | External | 3m | Half-Battered | HD

SKU: ATK-HWA-001-5205

Material	Concrete, Kellen
Finish	Standard Wet Cast, Optiflex, Lavaro
Size	130-150(w) x 120(d) x 785(l)
Weight Per Unit	29.4kg
Manufacturing Standard	BS EN 1340:2003
Density	2350 kg/m³
GWP (total) kgCO2e	3.13 kgCO2e/unit
Dutch Ref.	TROTTOIRBOCHTBANDEN-13-15x12xL78.5-3m-HD
Type	Radius External
End Style	HD
Profile	130-150x120
Position	-
Face	Half-Battered
Face Angle	81°
Return Angle	-
Radius	3m
Number per 360	24
Slope Angle	-
Slope Gradient	-

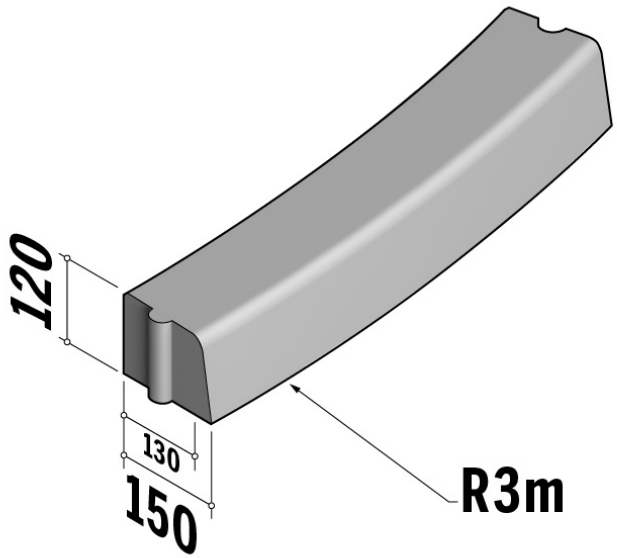

Active Travel Kerbs are available in a range of colours, finishes and materials.

Specification & technical data is indicative and subject to change. Images are for illustrative purposes only, details may vary. Some data may vary according to colour / material / finish variation.