Civils & Highways / Active Travel Kerbs / Edging

Edging 100

100x200 | Radius | L-785 | External | 8m | Rounded | VB

SPECIFICATION

Edging 100 | 100x200 | Radius | L-785 | External | 8m | Rounded | VB

SKU: ATK-EDG-001-5158

Material	Concrete, Kellen
Finish	Standard, Lavaro
Size	100(w) x 200(d) x 785(l)
Weight Per Unit	35.98kg
Manufacturing Standard	BS EN 1340:2003
Density	2350 kg/m³
GWP (total) kgCO2e	3.83 kgCO2e/unit
Dutch Ref.	GAZONBOCHTBANDEN-KWARTROND-10x20xL78.5-8m-VB
Type	Radius External
End Style	VB
Profile	100x200
Position	-
Face	Rounded
Face Angle	-
Return Angle	-
Radius	8m
Number per 360	64
Slope Angle	-
Slope Gradient	-

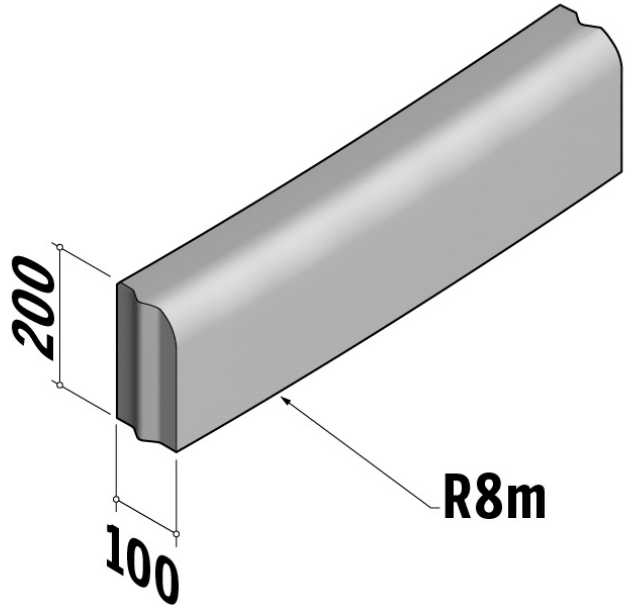

Active Travel Kerbs are available in a range of colours, finishes and materials.

Specification & technical data is indicative and subject to change. Images are for illustrative purposes only, details may vary. Some data may vary according to colour / material / finish variation.